ALTERNATING CURRENT MOTORS

ENCLOSURE: TOTALLY-ENCLOSED
MOUNTING: FOOT WITH C-FACE

SQUIRREL-CAGE INDUCTION
STAINLESS STEEL FRAME
FRAME 56C

COOLING: FAN COOLED

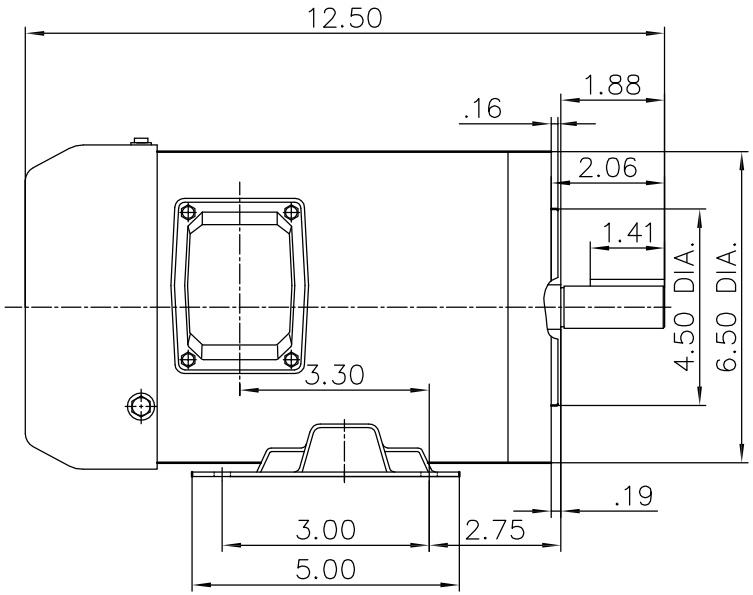

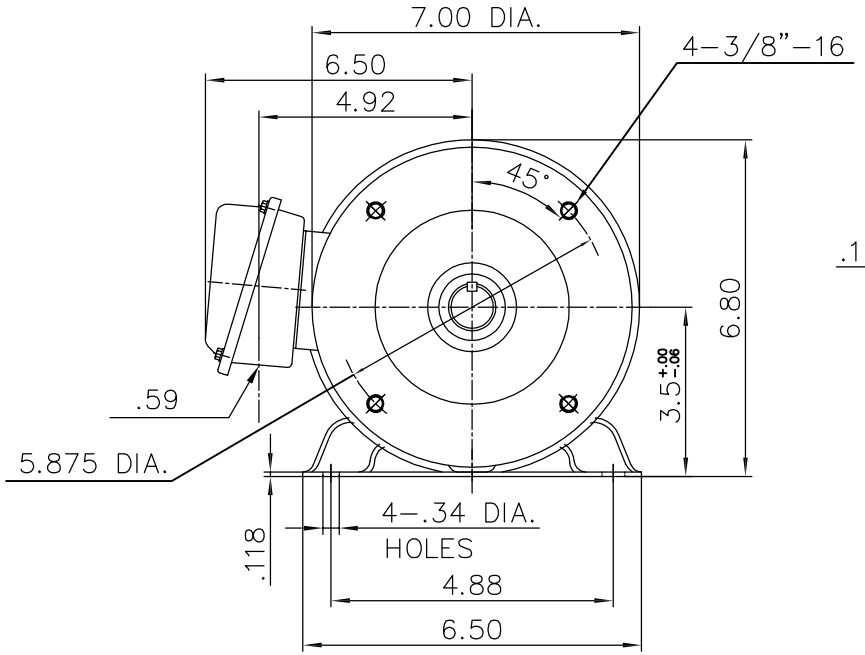

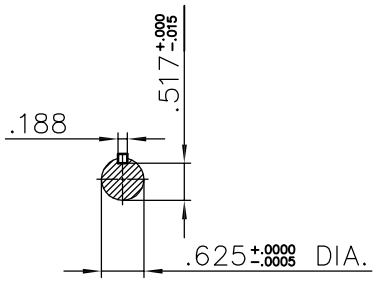

NOTES:

(1) DIMENSIONS ARE IN INCHES.
(2) APPROXIMATE WEIGHT = 1/4HP,2P,-32 LBS. 1/4HP,4P,-32 LBS.
1/4HP,6P,-32 LBS. 1/3HP,2P,-33 LBS.
1/3HP,4P,-33 LBS. 1/3HP,6P,-33 LBS.
1/2HP,2P,-34 LBS. 1/2HP,4P,-34 LBS.
1/2HP,6P,-34 LBS. 3/4HP,2P,-34 LBS.
3/4HP,4P,-34 LBS.

(3) DRIVE END BEARING 6205-2RZ
OPPOSITE DRIVE END BEARING 6205-2RZ

FRAME- _____ CERTIFIED FOR- _____
ORDER- _____ ITEM _____ HP- _____ RPM- _____ PH- _____ HZ- _____ VOLTS- _____

TATUNG

DR. BY Barry
CK. BY Sky shen
APP. BY C. L. Wang
DATE 2017. 04. 18

DIMENSION SHEET

SAS-013284